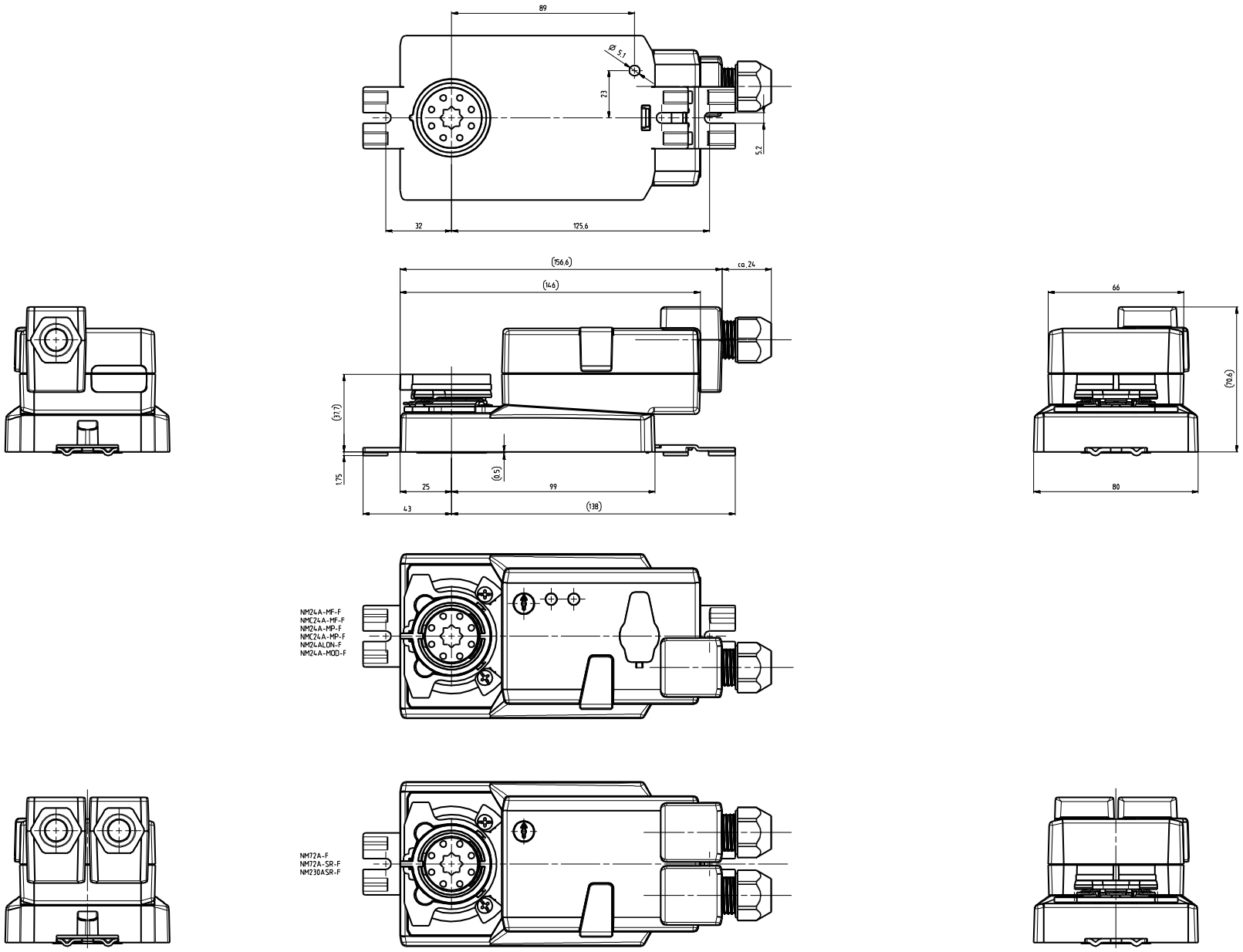

Formschlussversion / Festmontage
form-fit version / fix-mounting

Klemmenanschluss IP54
terminal plug IP54

	Date	Name
Drawn	20.03.2017	Wyf
Appr.		
Scale:	1:1	
Voll cm³ l:		

Document description
NM_230A_form-fit-TP

Document number
not released for production

Material specification

Dev.no:	ch0040648	Dev.rev:	01
No.of sheets:	1	Sheet no:	1

Inspection agreement with supplier
☐ See inspection agreement
☐ No inspection agreement necessary

Notes: Dimensions are in Millimeters
Imp. 1 inch = 25,4 mm
Drawn according to the first angle projection method.

General tolerances in accordance with ISO 2768-mK

Legal Notice: Any distribution, copying or disclosure of this document or its contents is prohibited unless expressly authorized. Failure to comply will incur liability for damages. All rights pertaining to patenting or design registration are reserved.