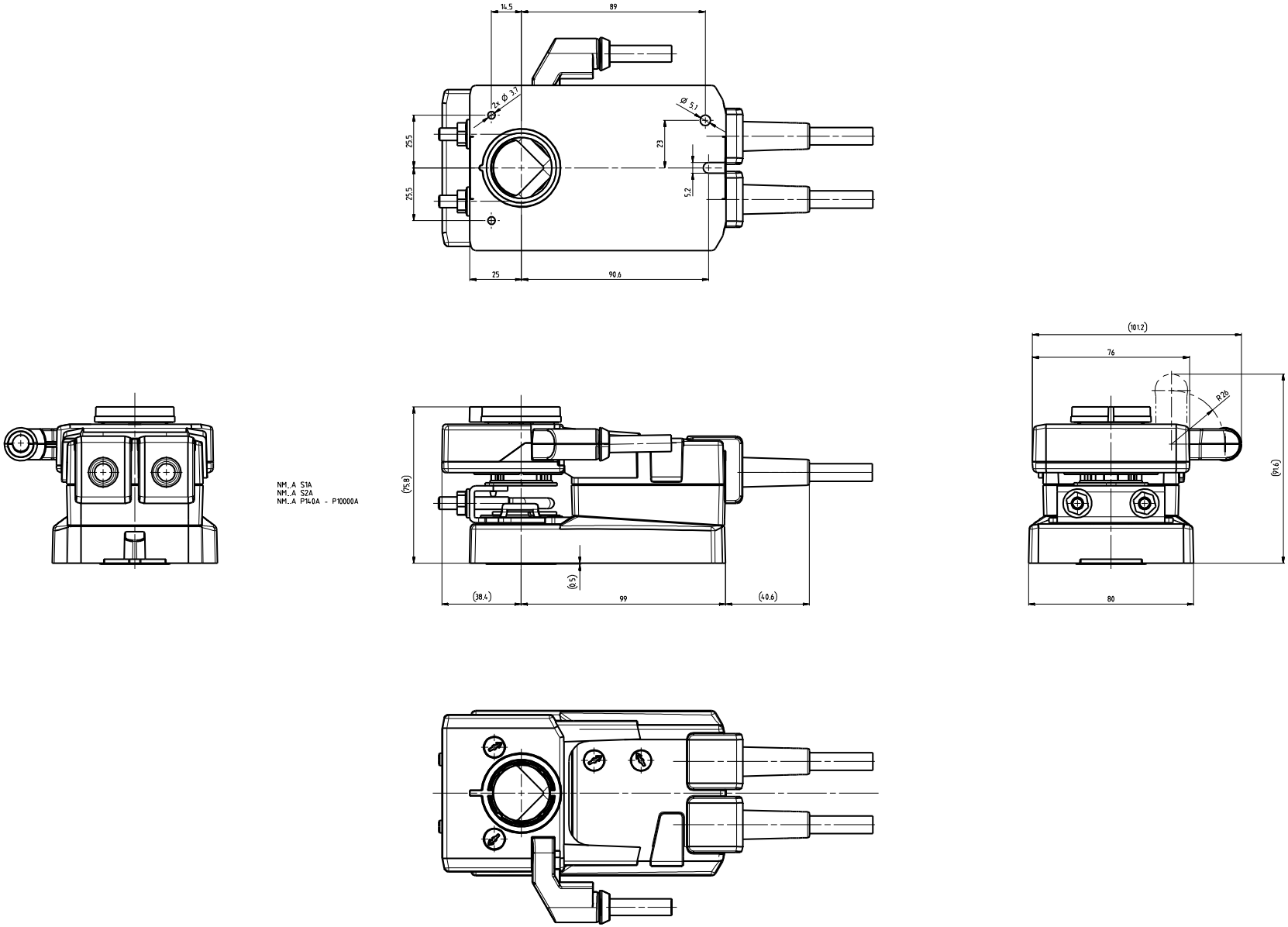

Universalklemmbock
universal spindle clamp

Hilfsschalter / Rückführpotentiometer aufsteckbar
auxiliary switch / feedback potentiometer add-on

	Date	Name
Drawn	08.03.2017	Wyf
Appr.		
Scale:	1:1	
Voll cm³ 1:		

Document description
NM_A_standard-S-Poti

Document number
not released for production

Material specification

Dev.no:	ch0040457	Dev.rev:	01
No.of sheets:	1	Sheet no:	1

Inspection agreement with supplier
☐ See inspection agreement
☐ No inspection agreement necessary

BELIMO

Legal Notice: Any distribution, copying or disclosure of this document or its contents is prohibited unless expressly authorized. Failure to comply will incur liability for damages. All rights pertaining to patenting or design registration are reserved.

General tolerances in accordance with ISO 2768-mK

Notes: Dimensions are in Millimeters (mm). 1 inch = 25,4 mm. Drawn according to the first angle projection method.