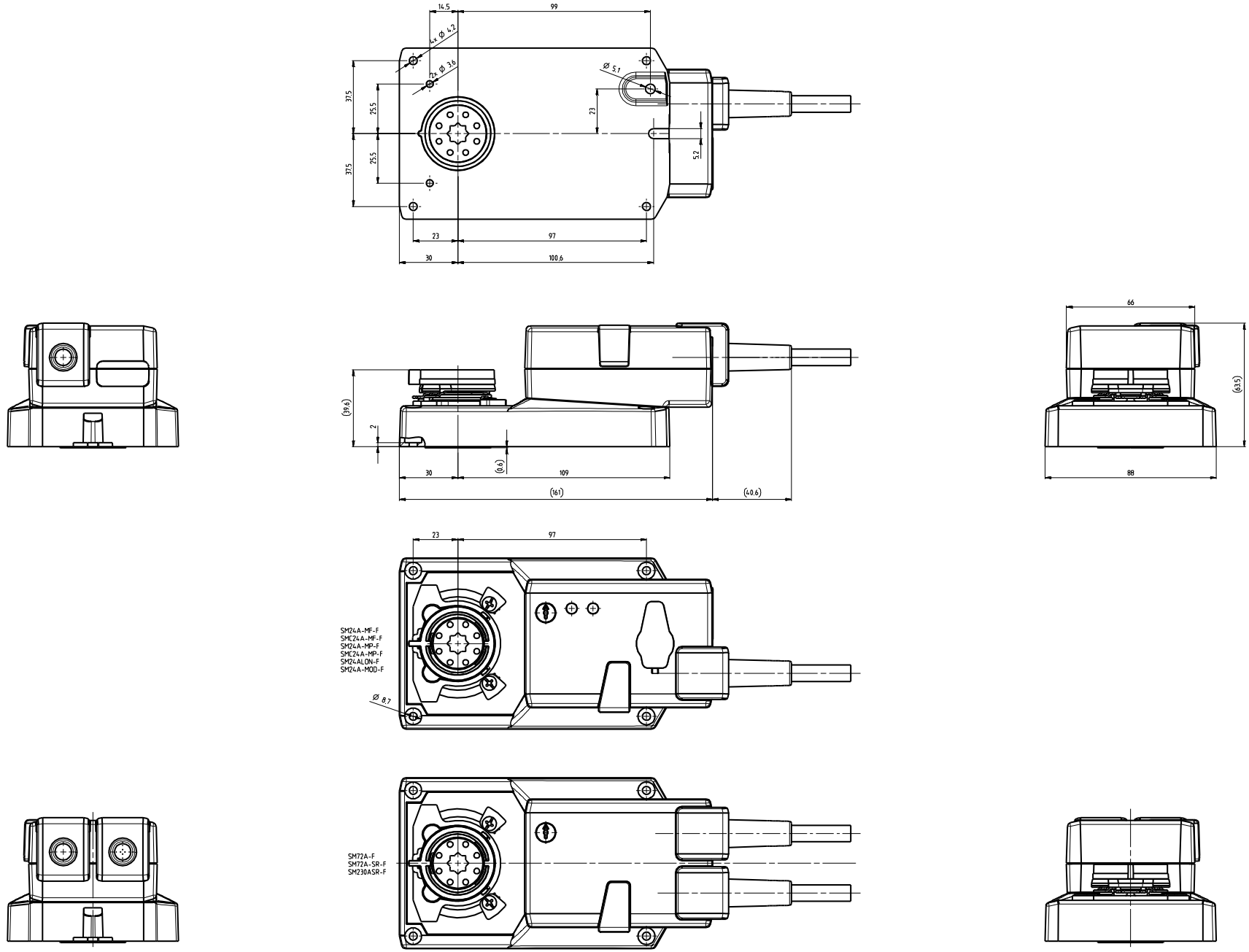

Formschlussversion / Festmontage
form-fit version / fix-mounting

	Date	Name	Document description
Drawn	08.03.2017	Wyf	SM_230A_form-fit
Appr.			
Scale:	1:1		
Voll cm³ 1:			

BELIMO

Document number: **not released for production**

Material specification

Dev.no:	ch0041424	Dev.rev:	01
No.of sheets:	1	Sheet no:	1

Inspection agreement with supplier
☐ See inspection agreement
☐ No inspection agreement necessary

Legal Notice: Any distribution, copying or disclosure of this document or its contents is prohibited unless expressly authorized. Failure to comply will incur liability for damages. All rights pertaining to patenting or design registration are reserved.

General tolerances in accordance with ISO 2768-mK

Notes: Dimensions are in Millimeters (mm), 1 inch = 25.4 mm. Drawn according to the first angle projection method.