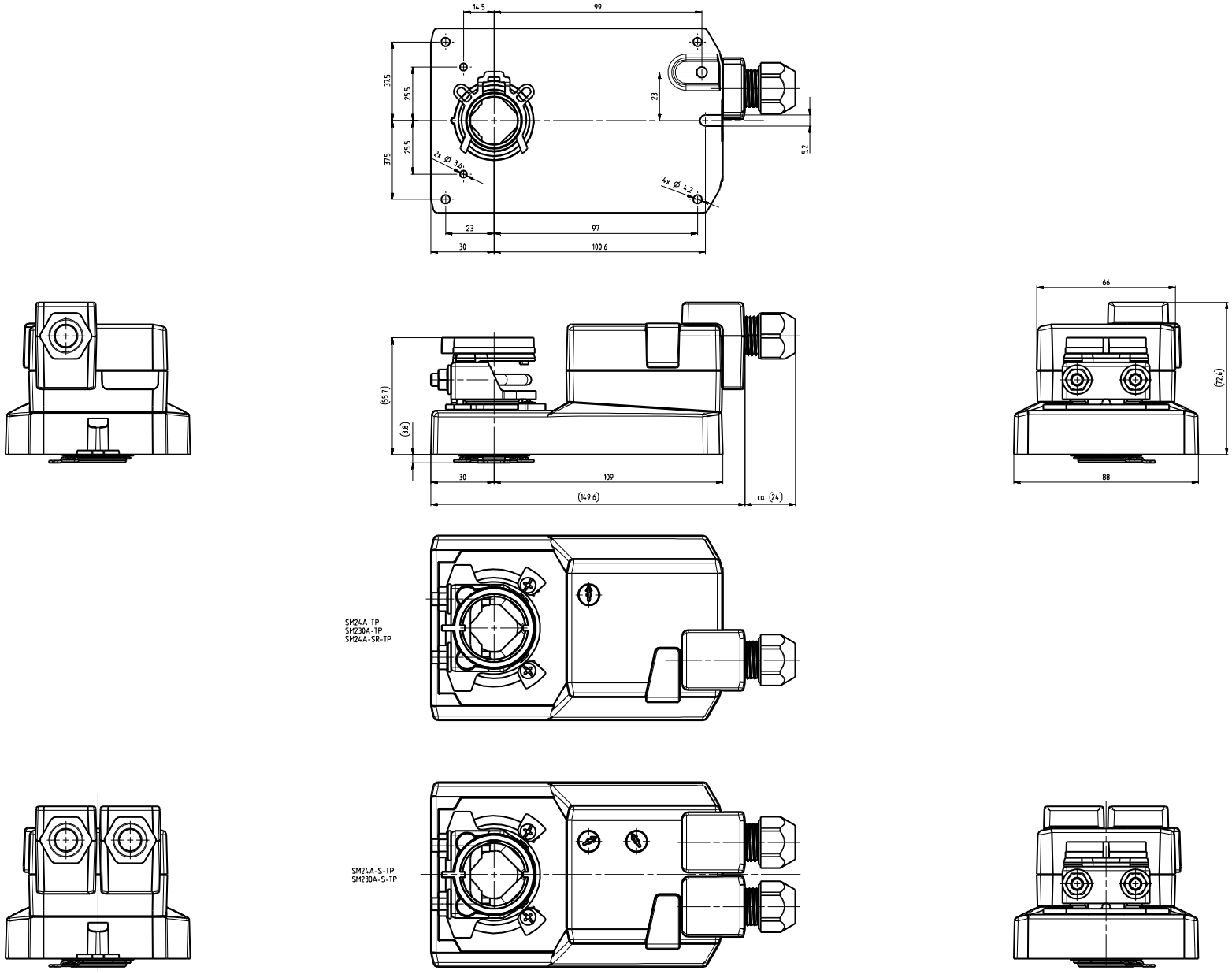

Kehrbarer Klemmback
reversible clamp

Klemmenanschluss IP54
terminal plug IP54

	Date	Name
Drawn	08.03.2017	Wyf
Appr.		
Scale:	1:1	
Voll cm³ 1:		

Document description
SM_A_standard-TP

Document number
not released for production

Material specification

Dev.no:	ch004132	Dev.rev:	01
No.of sheets:	1	Sheet no:	1

Inspection agreement with supplier
☐ See inspection agreement
☐ No inspection agreement necessary

BELIMO

General tolerances in accordance with ISO 2768-mK

Notes: Dimensions are in Millimeters (mm), 1 inch = 25.4 mm. Drawn according to the first angle projection method.

Legal Notice: Any distribution, copying or disclosure of this document or its contents is prohibited unless expressly authorized. Failure to comply will incur liability for damages. All rights pertaining to patenting of design registration are reserved.